High Field ICR Magnet Design and Performance

January 16th , 2008

Dr. G. Roth, Bruker BioSpin, Karlsruhe

Overview

- Current status of Ultra High Field Magnets at Bruker
- 21 T FTMS Magnet – Design and recent improvements
- Future Materials for Ultra High Field Magnets

NMR Magnet Milestones

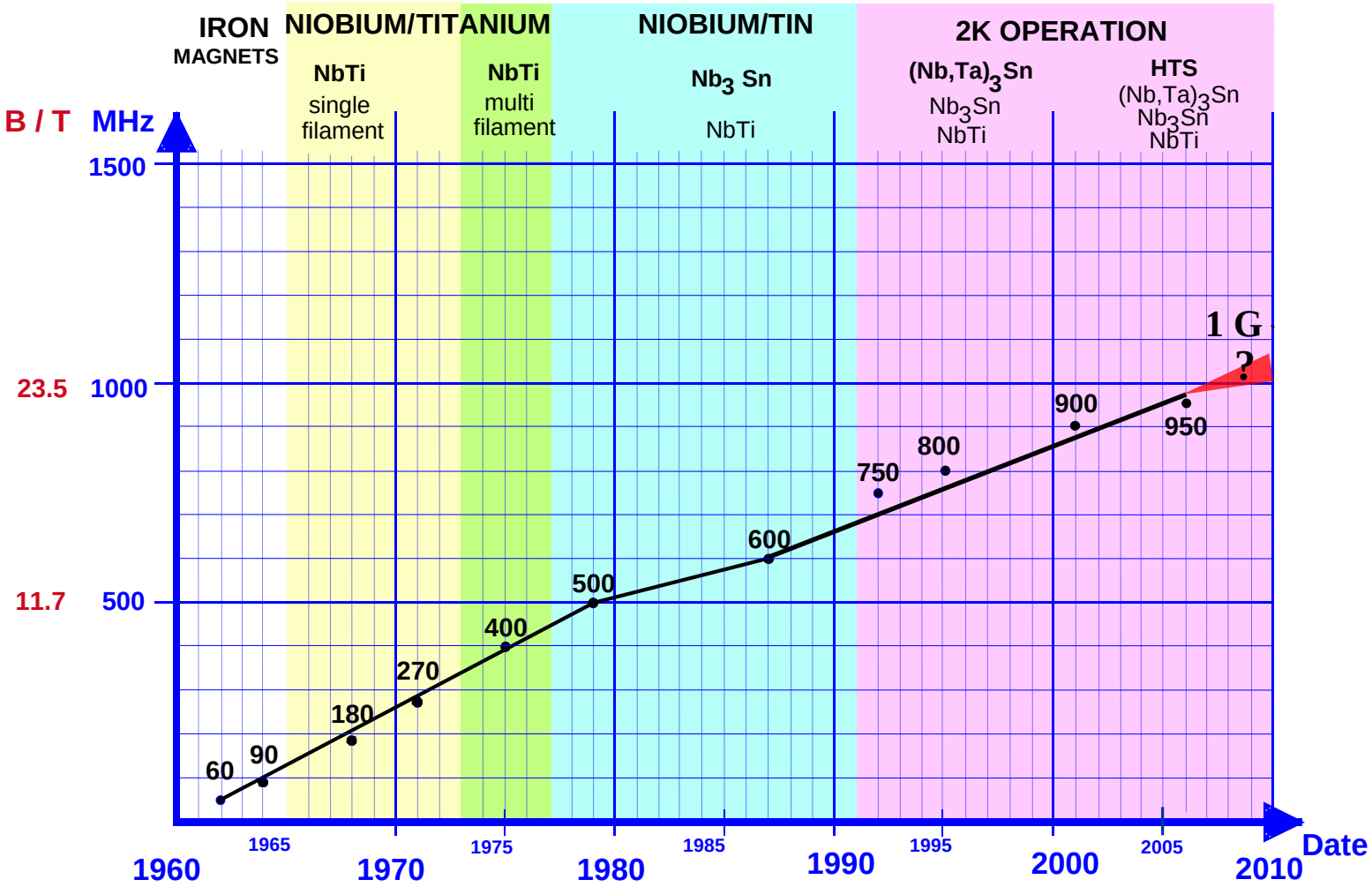

Magnet systems with full NMR capability (Superconducting in persistent mode)

Milestones of NMR Magnet Technology

UltraStabilized™ UltraShield™

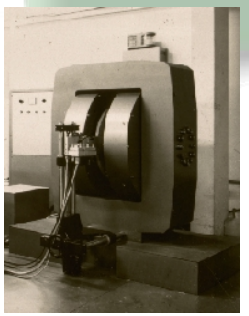

1967
90 MHz

1979
400 MHz

1983
500 MHz

1992
750 MHz SB

1995
800 MHz

1996

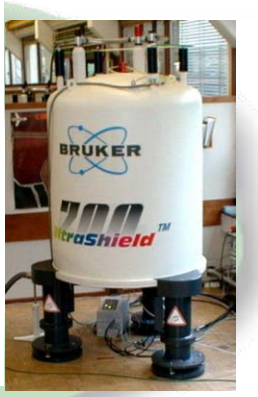

1998
700 MHz UltraShield

2006
950 MHz US²

800 MHz US² Plus

2004
900 MHz US²
850 MHz US² WB

2003
UltraShield Plus

2000-2001
800 MHz US²
900 MHz

Key Technologies for High Field Magnets

- Sub-cooling technology
- Wire technology
- Superconducting joints
- Control of forces
- High current design
- Shielding Technology
- Screening against disturbances
- Refrigeration Technology

950 MHz HR-NMR

15 T FTMS

UltraStabilized™ Subcooling Technology

- Long term stable magnet
- Low Helium consumption
- No adjustments necessary
- Easy Helium refills

- Patented technology
- Pioneered by Bruker
- Proven track record
- over 130* systems installed

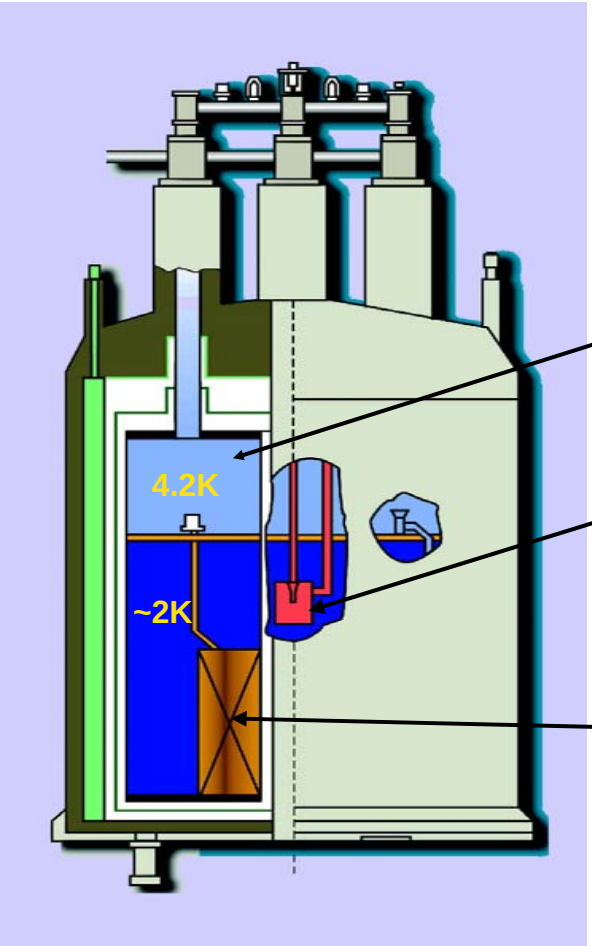

* As of December 2007

Subcooled/UltraStabilized ⟷ pumped

slight overpressure

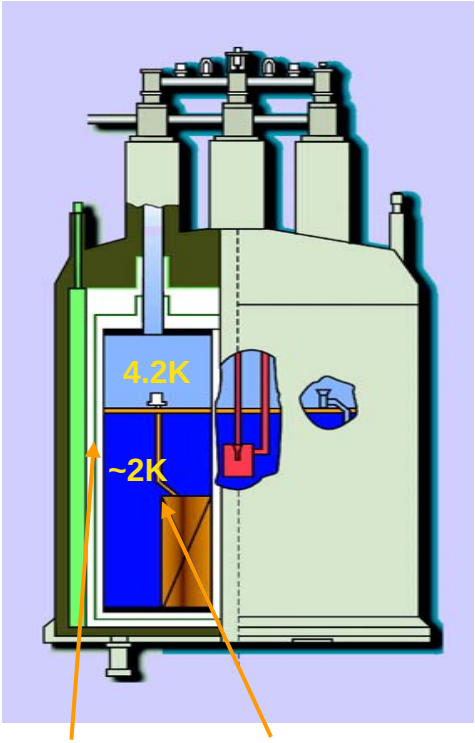

He tanks at 1.05 bar

Low temperature generated by subcooling unit

low pressure -1 bar

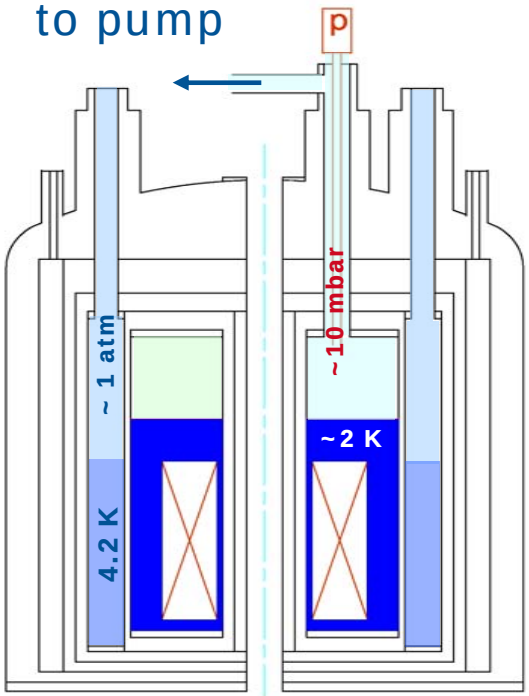

He-Gas
10 mbar

LHe
10 mbar

Low temperature generated by direct pumping at Helium bath

Comparison of Design Choices

High current design

$I_M = 2 \cdot I_o$

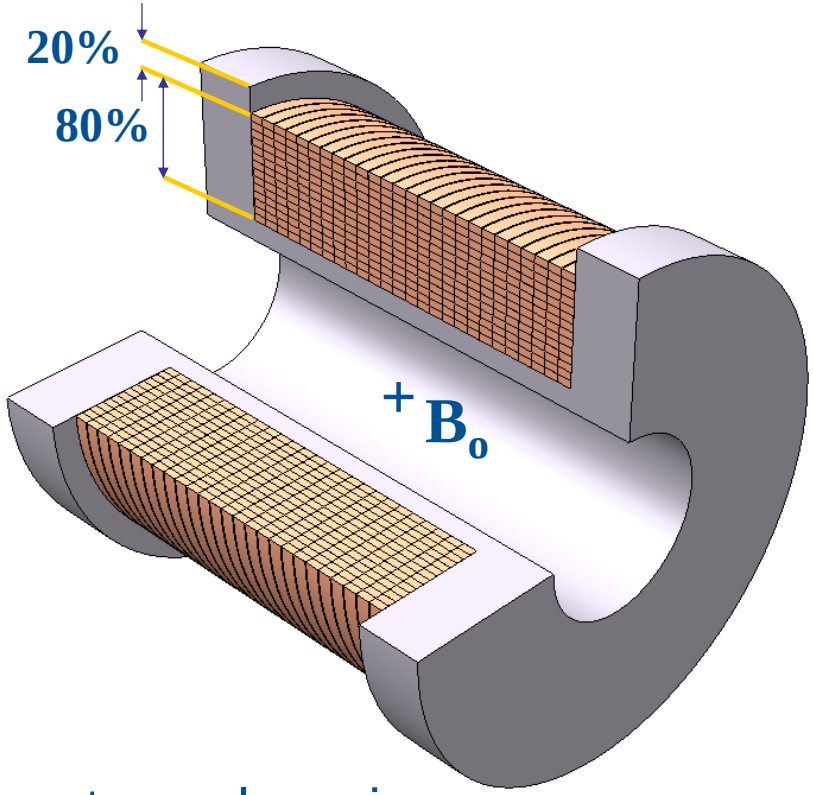

- rectangular wire
- conductor area = 4 mm²

Low current design

$I_M = I_o$

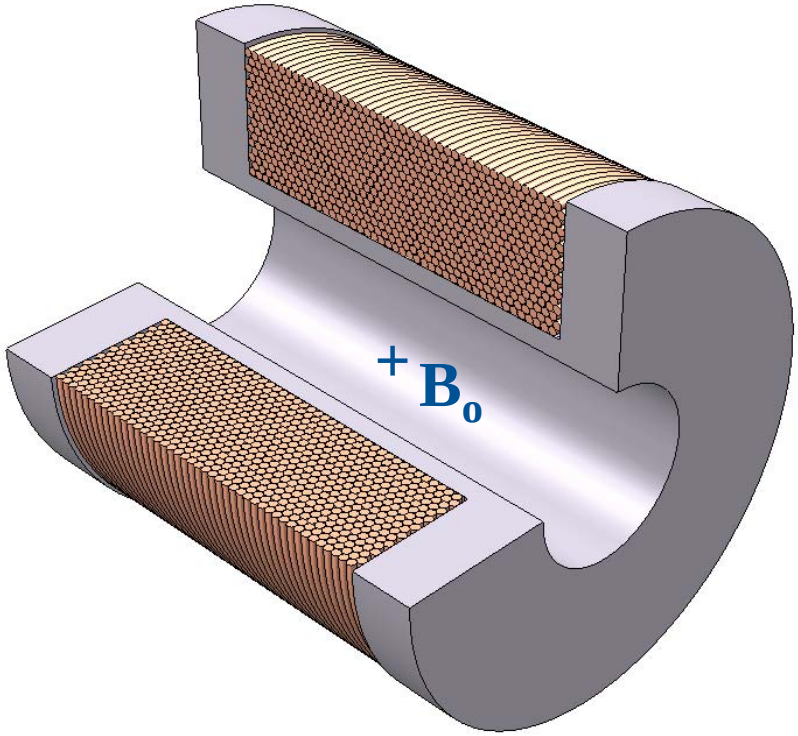

- round wire
- conductor area = 2 mm²

Comparison of NbTi and Nb_3Sn Conductors

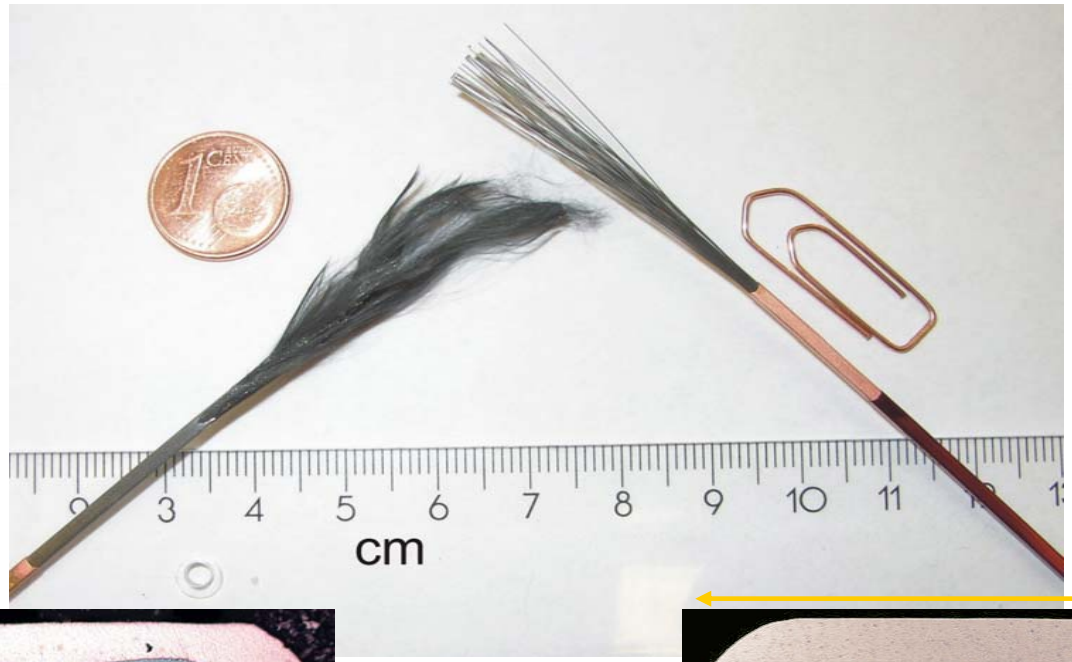

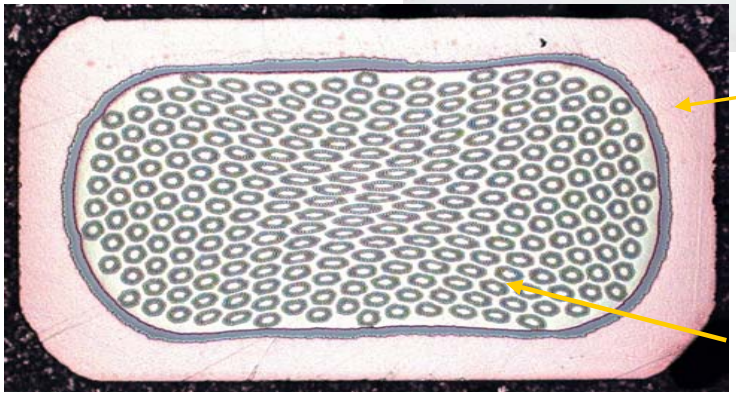

Cu

Nb

(NbTaTi)3Sn
Bundle

2 mm

1 mm

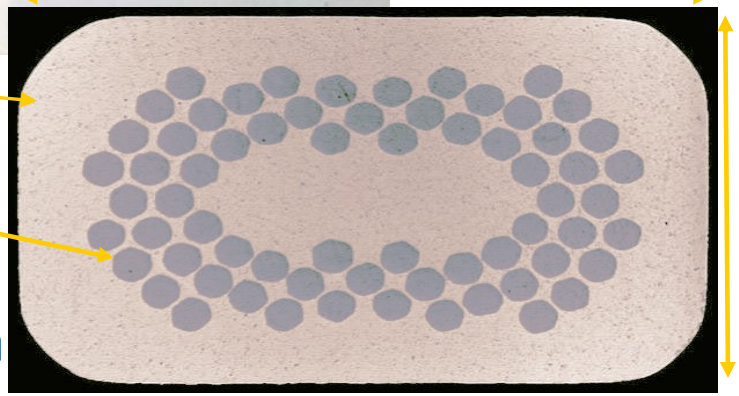

$(NbTaTi)_3Sn$-conductor
~ 50.000 filaments, 5µ

NbTi-conductor
66 filaments, 100µ

UltraShield Technology

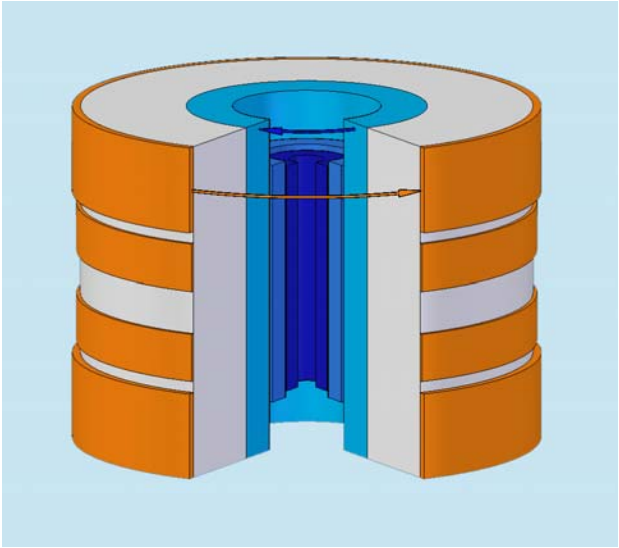

Inner sections (Blue): main field coils

Outer sections (Red): shielding coils

- Significantly smaller stray fields
- improved screening against external field perturbations

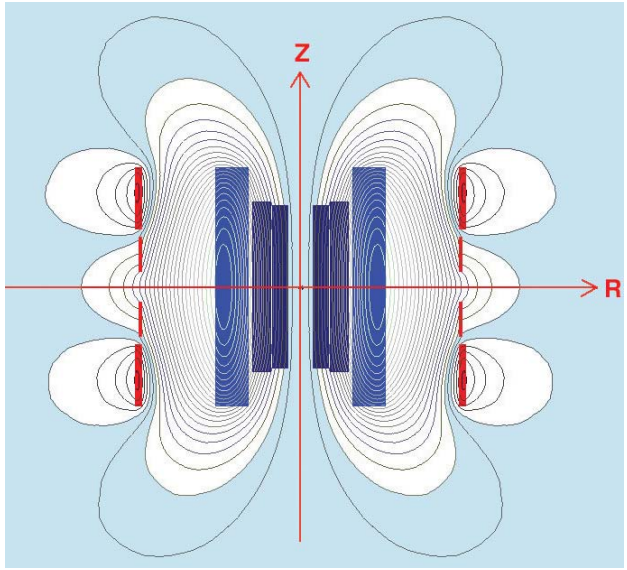

External Disturbance Suppression

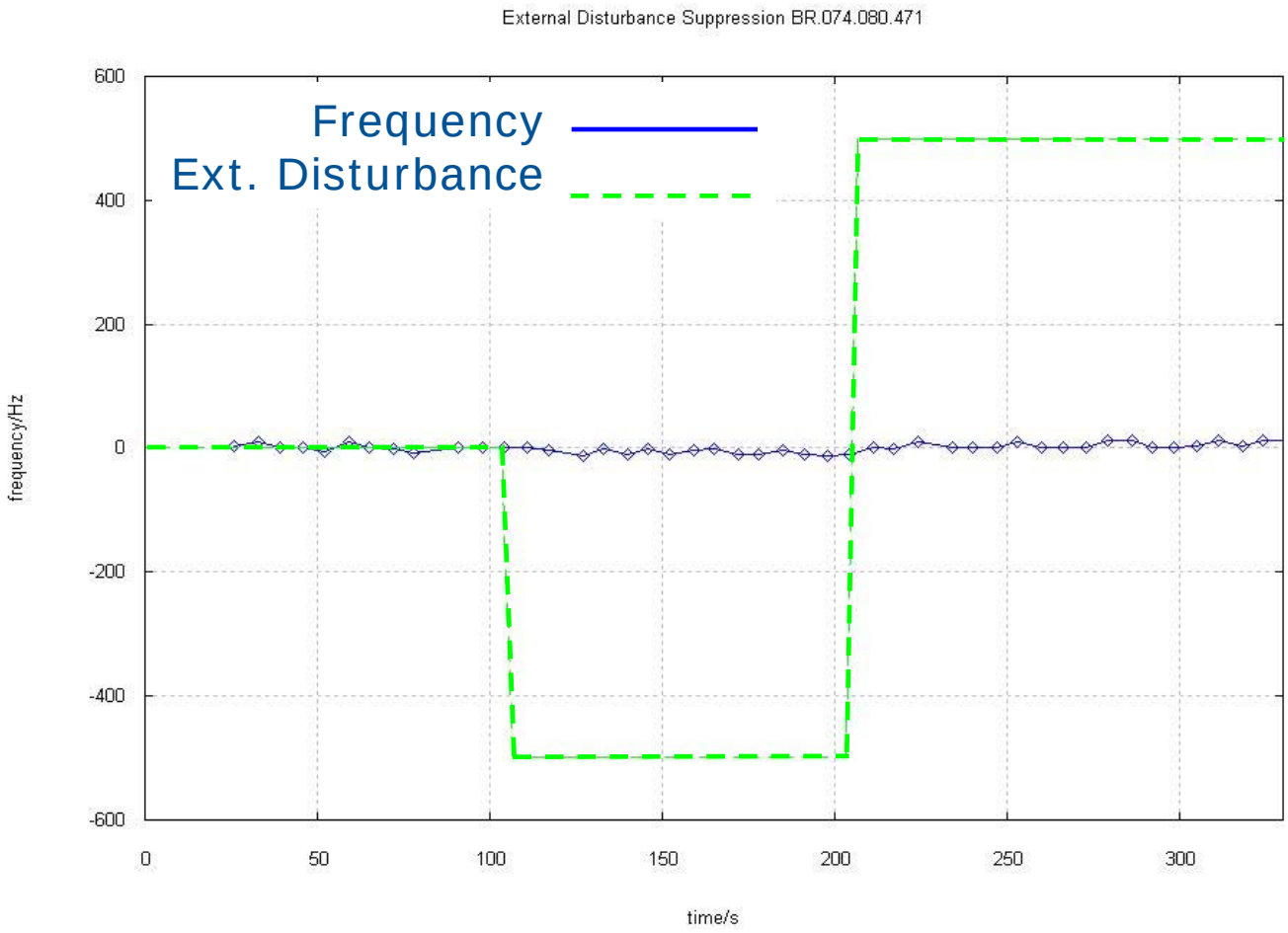

Successful Combination of Technologies

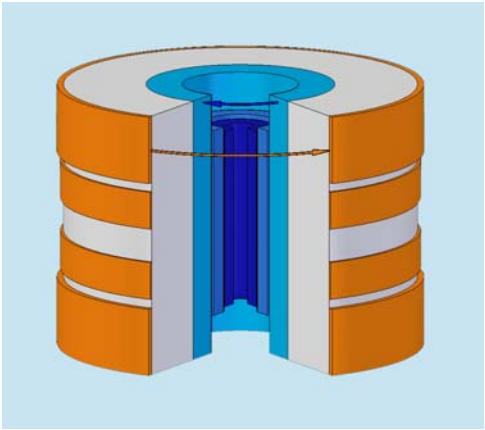

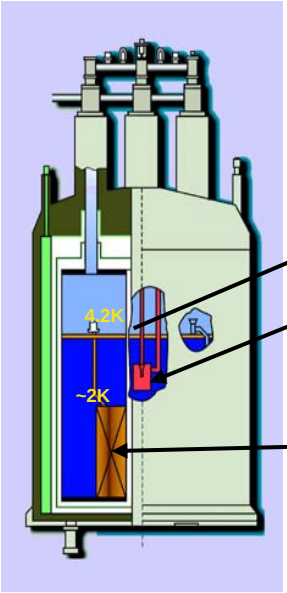

Thermal Barrier

Joule-Thompson Cooling Unit

Superconducting Magnet coil

UltraShield™ + UltraStabilized™

US²

Bruker UltraShield/UltraStabilized Magnets

950 US² Magnet

- Highest available NMR frequency
- Actively shielded magnet
- Same stray field as for 900 US²
- Same cryostat as 900 US²
- Same specs, only frequency is different
- excellent drift performance
- 5 G radially: 3.3 m

New 800 UltraShield **Plus**

- Most compact 800 MHz magnet
- Siting in single story lab (12’)
- Ultra small stray field (1.5 m) pre-requisite for hyphenated applications
- Lowest stored energy
- Proven technology
- Unmatched stability

New 800 US Plus fits into single story lab

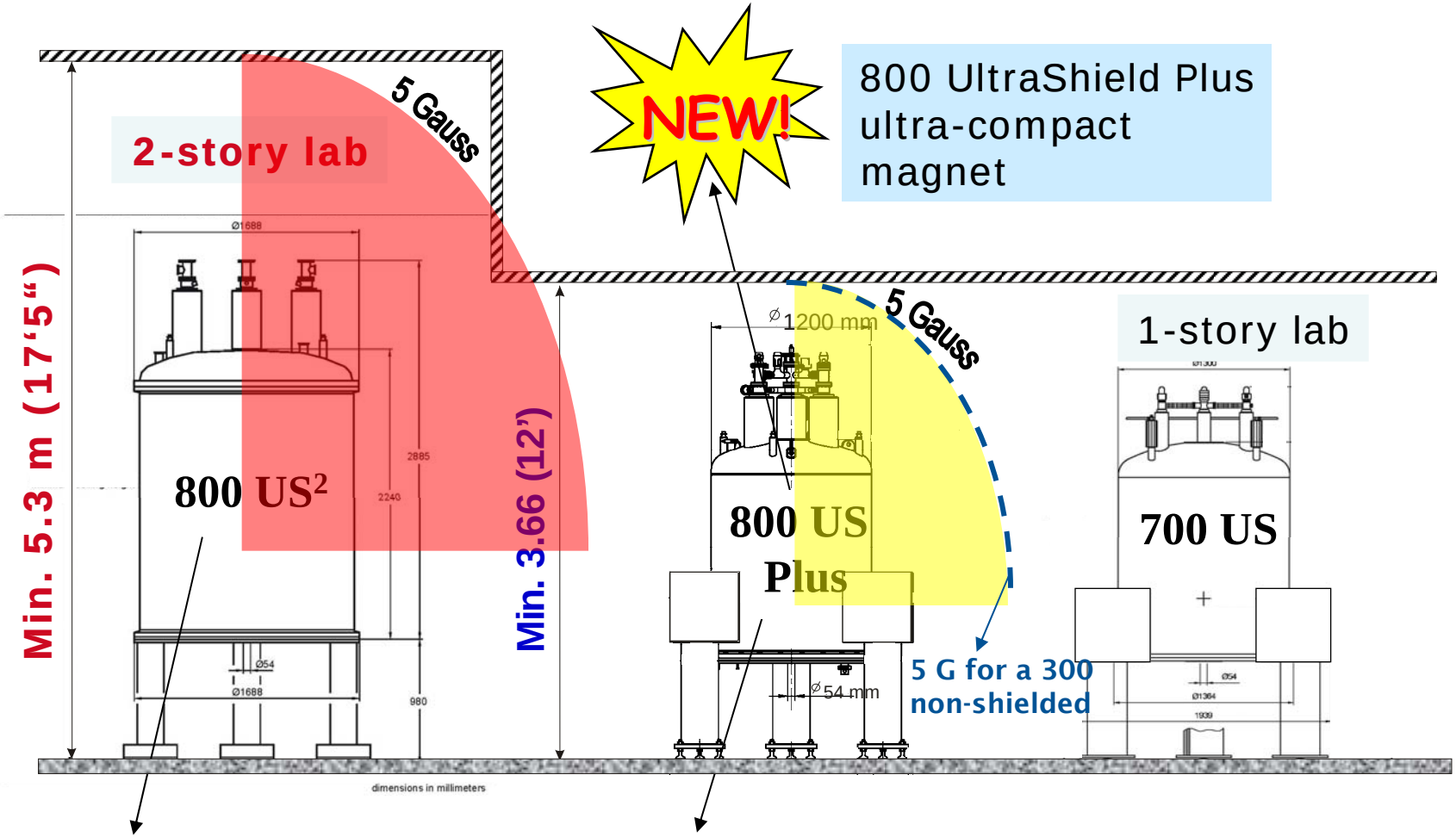

Introduced in 2001

Introduced in 2006

Horizontal Bore Magnets

- **USR = UltraShield Refrigerated**
- First refrigerated magnet delivered August 2001 for MRI
- More than 120 “USR“ systems delivered to date

- **Five magnet versions** currently in production **for MRI**
- 4.7T/40/USR
- 7.0T/30/USR
- 9.4T/20/USR
- 9.4T/30/USR
- 11.7T/16/USR

- **Four magnet versions for FTMS**
- 7.0T/11/USR
- 9.4TT/11/USR
- 12.0T/11/USR
- 15.0T/11/USR

9.4 T 20 cm

USR Features and Benefits

- Advanced refrigeration technology with pulse tube cooler
  - N2-free systems
  - Continuous maintenance-free operation for > 1 year, in between scheduled service visits for the refrigerator
  - No user intervention or maintenance needed

Pulse tube cold head on magnet

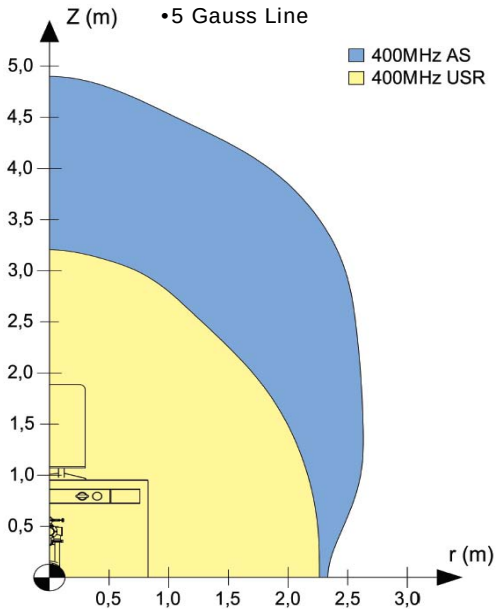

Advanced UltraShield active-shielding technology

- Minimal stray fields

Size Advantages . . .

94/30 AS

94/30 USR

15 Tesla Refrigerated Superconducting Magnet

World's highest field FTMS

The *new* 15 tesla UltraShield refrigerated magnet recently installed at KBSI in Ochang, S. Korea

Photo courtesy of Korea Basic Science Institute (KBSI)

ESI-FTMS apex ultra 15 T
Apollo II Dual ESI/MALDI Source

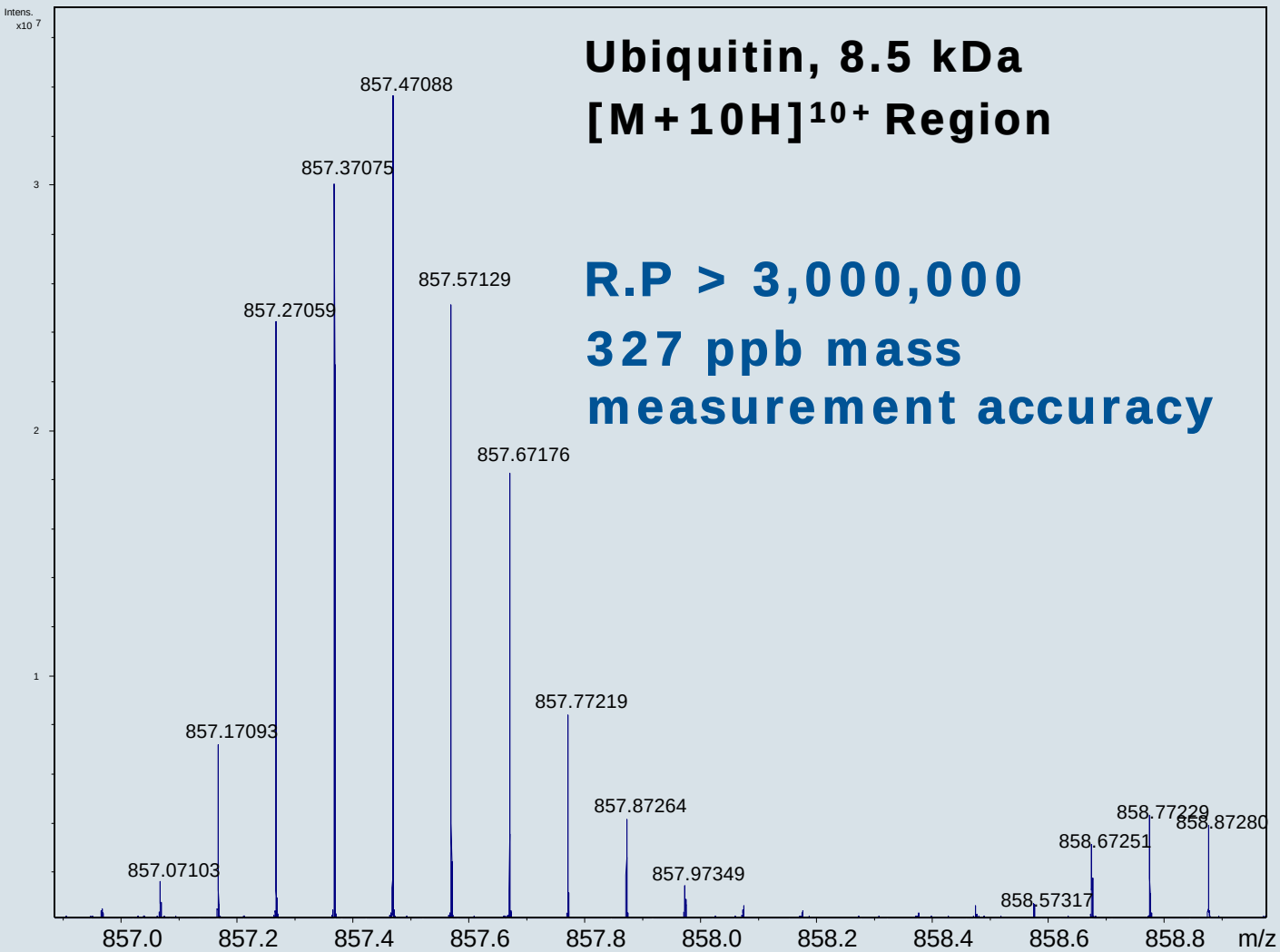

Ubiquitin, 8.5 kDa

$[M+10H]^{10+}$ Region

R.P > 3,000,000

327 ppb mass measurement accuracy

Data courtesy of Korea Basic Science Institute (KBSI)

Bruker BioSpin

Combination of Key Technologies

High Field Magnet Technology

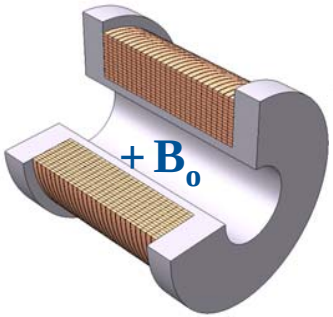

+

Horizontal Bore Cryostat Technology

+

Sub-cooling Technology

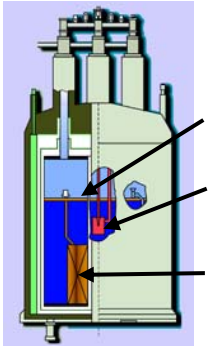

=

Sub-cooled Horizontal Bore Magnets

Neurospin – 1st Sub-cooled Tomography Magnet

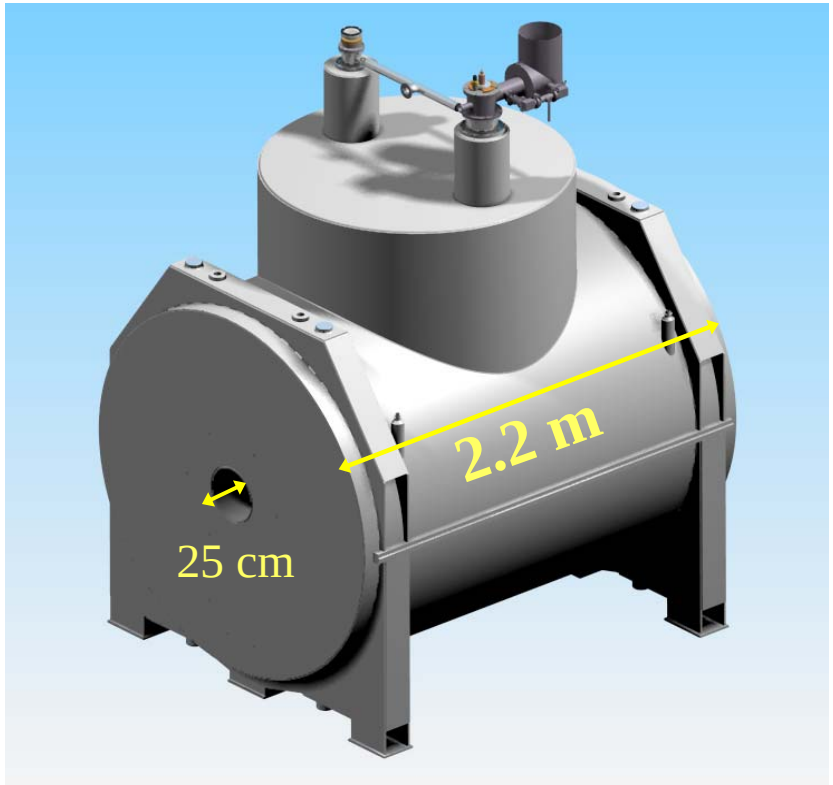

750 MHz Field Strength

∅25 cm Room Temperature Bore

Drift < 35 Hz/hr

Homogeneity < ±2 ppm in 9 cm dsv

Cryogenic consumption:

Helium	< 2 ltr / hr
Nitrogen	< 3 ltr / hr

UltraStabilized Magnet

Neurospin Project, France

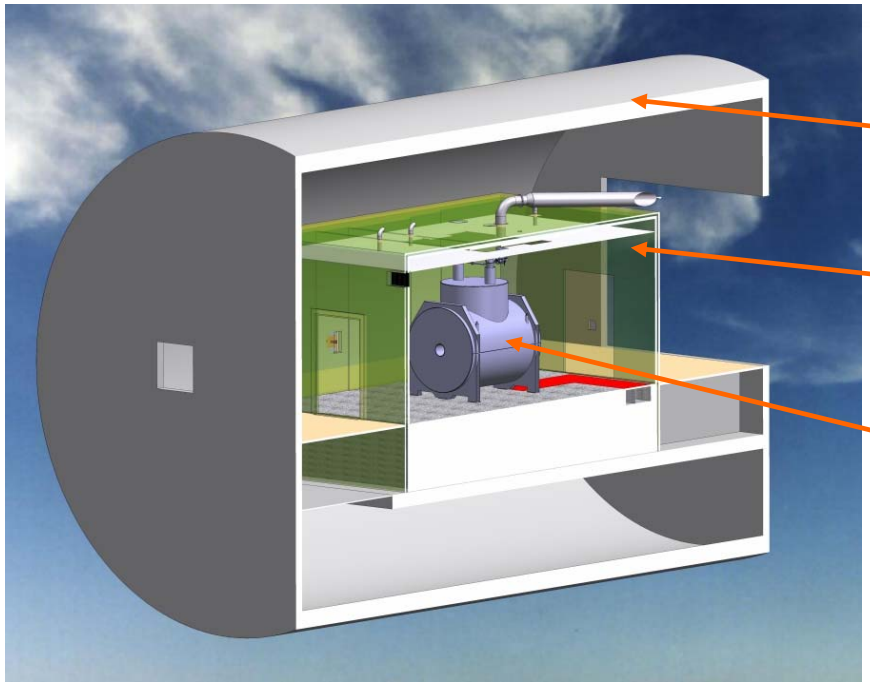

Building structure

Iron Shield

Non-shielded magnet

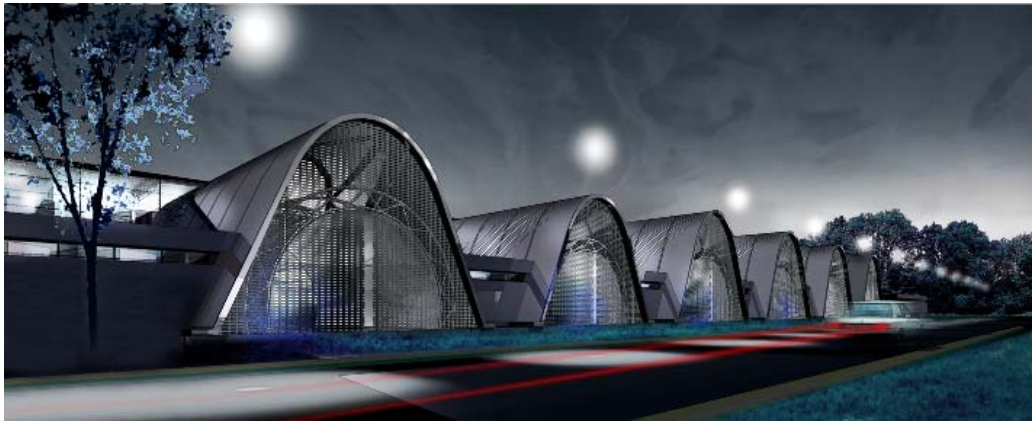

Magnet Delivery December 2007

- World‘s Highest Field Preclinical MRI Scanner
- Compact magnet design
- UltraStabilized^{TM} sub-cooling technology for highest field
- In vivo imaging at 17.65 T corresponding to 750 MHz

BC 176/25

Request for a Highest Field FTMS Magnet

NHMFL Specifications

21 T Field Strength

∅ 11 cm RT - Bore

Drift < 45 Hz/hr

Homogeneity (± 5 ppm)
L = 80 mm
D = 50 mm

50 G fringe field at z < 1.5 m

Cryogenic consumption:
Helium holdtime > 60 d
Nitrogen holdtime > 2 wks

Challenges

+ 40% or + 6 T above todays strongest FTMS field strentgh, corresponding to + 250 MHz

Compared to Neurospin: + 150 MHz

+ active shielding compared to Neurospin magnet

+ Refrigeration to fulfill cryogenic specs

Proposed Bruker 21 T FTMS Magnet

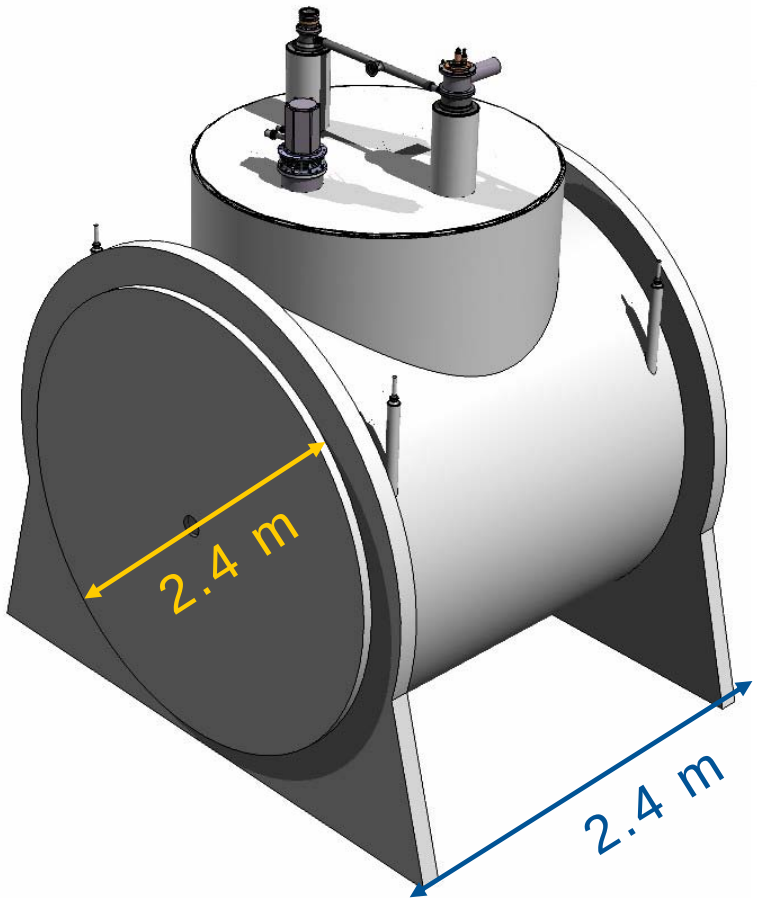

- Sub-cooled system with JT – refrigerator
- 110 mm RT bore
- Dual Stage PTC
- Only 90cm to MC
- 50G Stray field at 1.4m

Big step compared to current max. field strength and the experience of how fast the max. field could be increased historically

Properties of 21 T FT-ICR Magnet – Stray Field

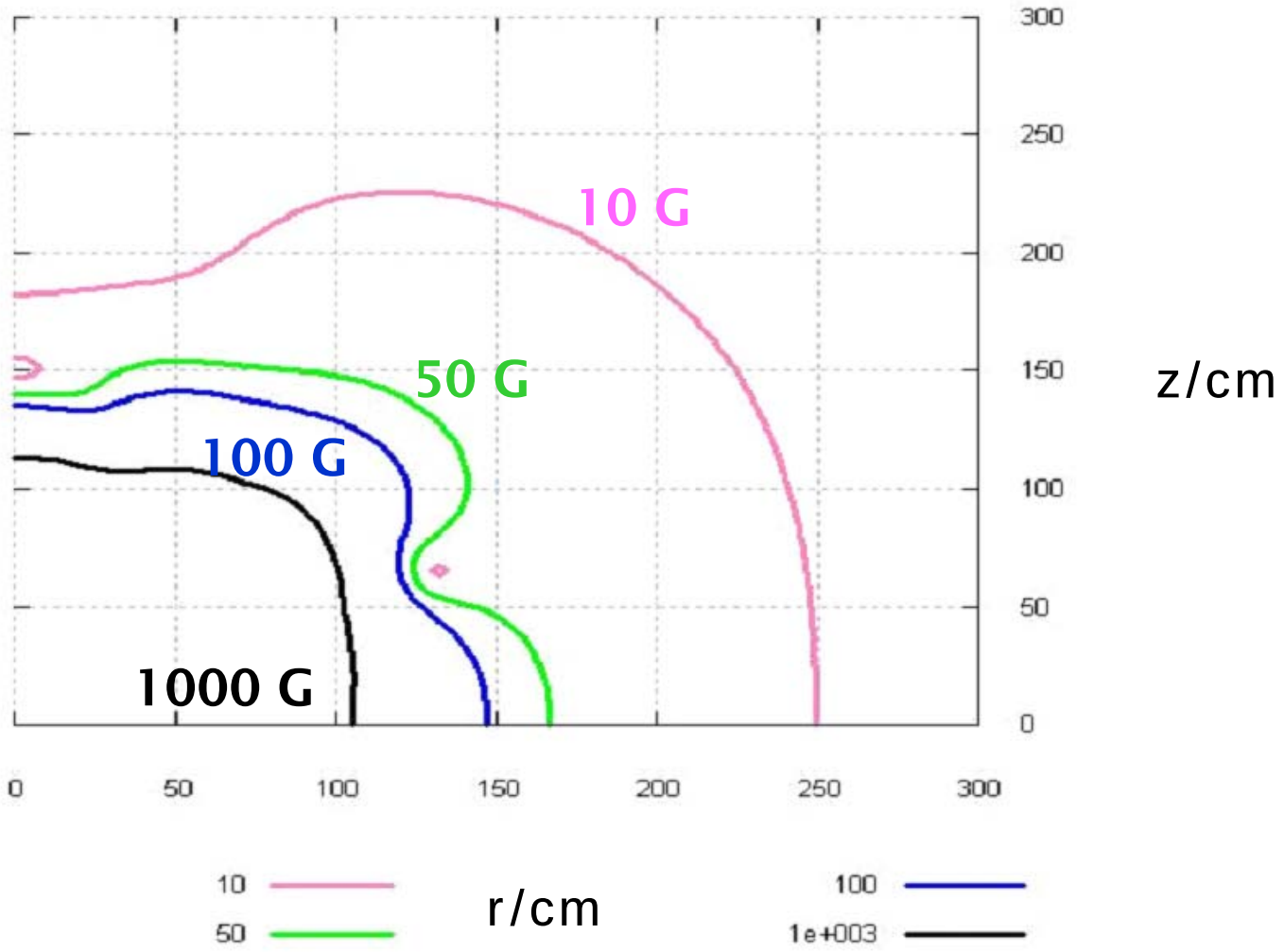

Properties of 21 T FT-ICR Magnet – 50G Point

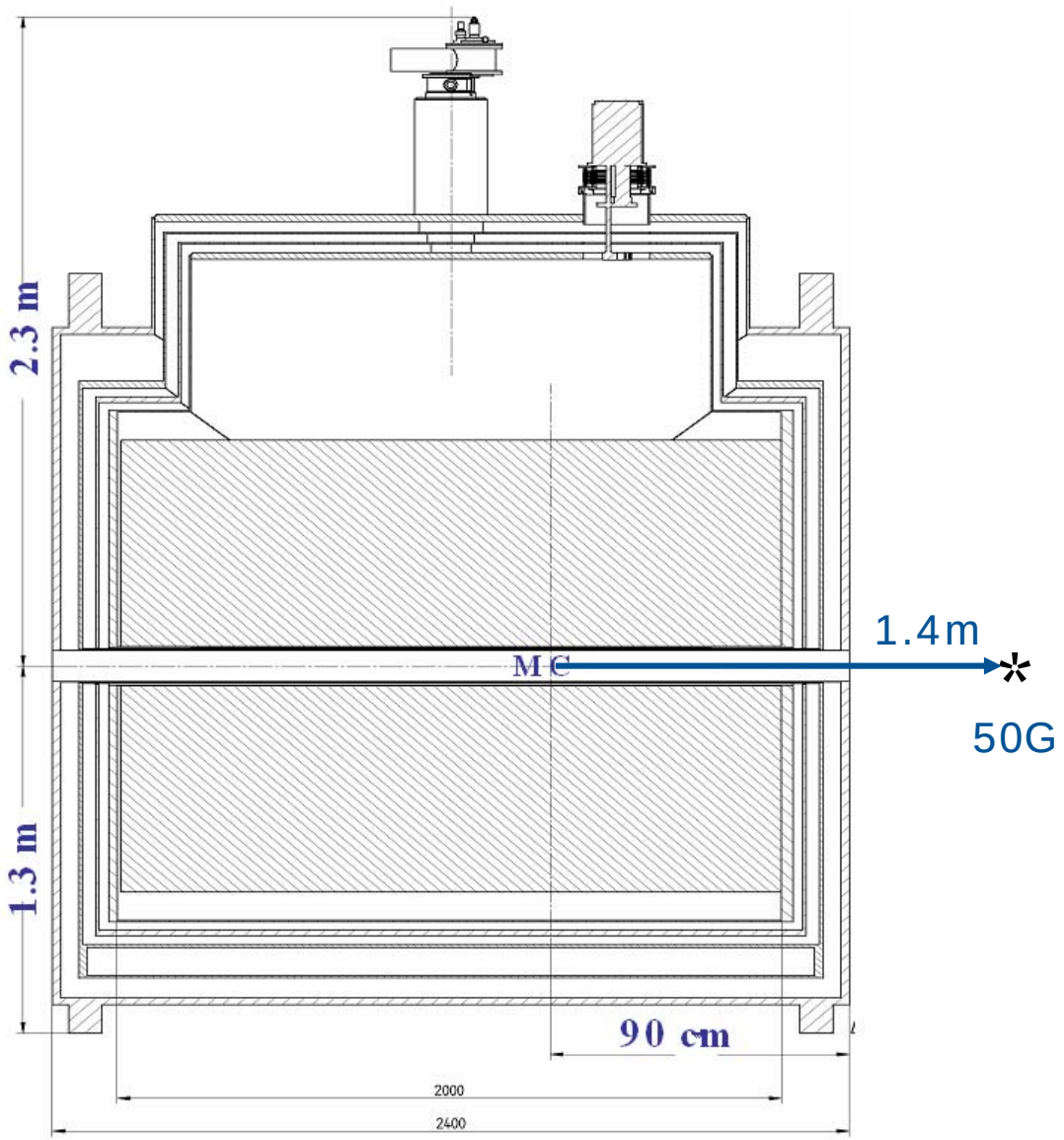

21 T FTMS Magnet – Axial Field Profile

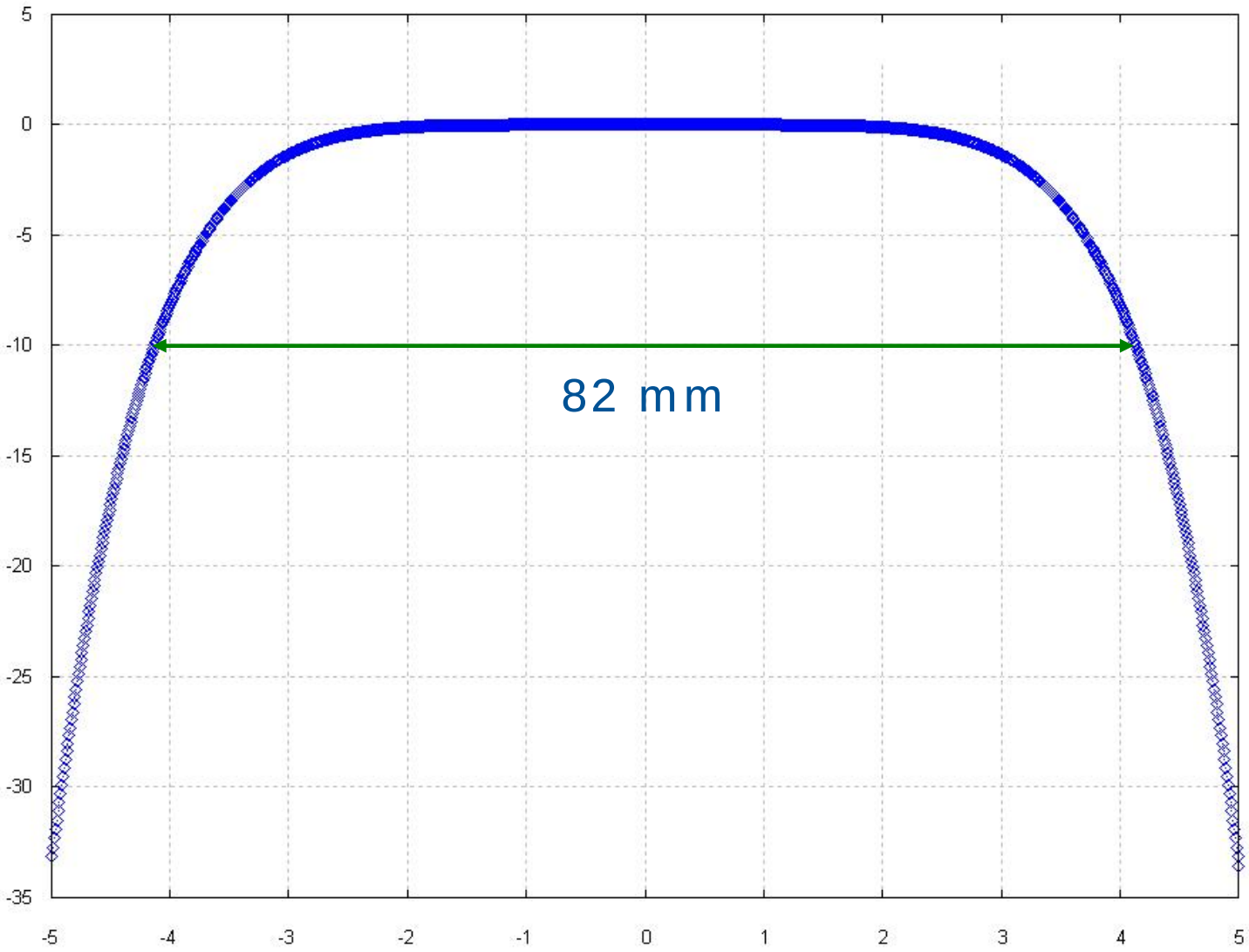

2 D - Contour Lines

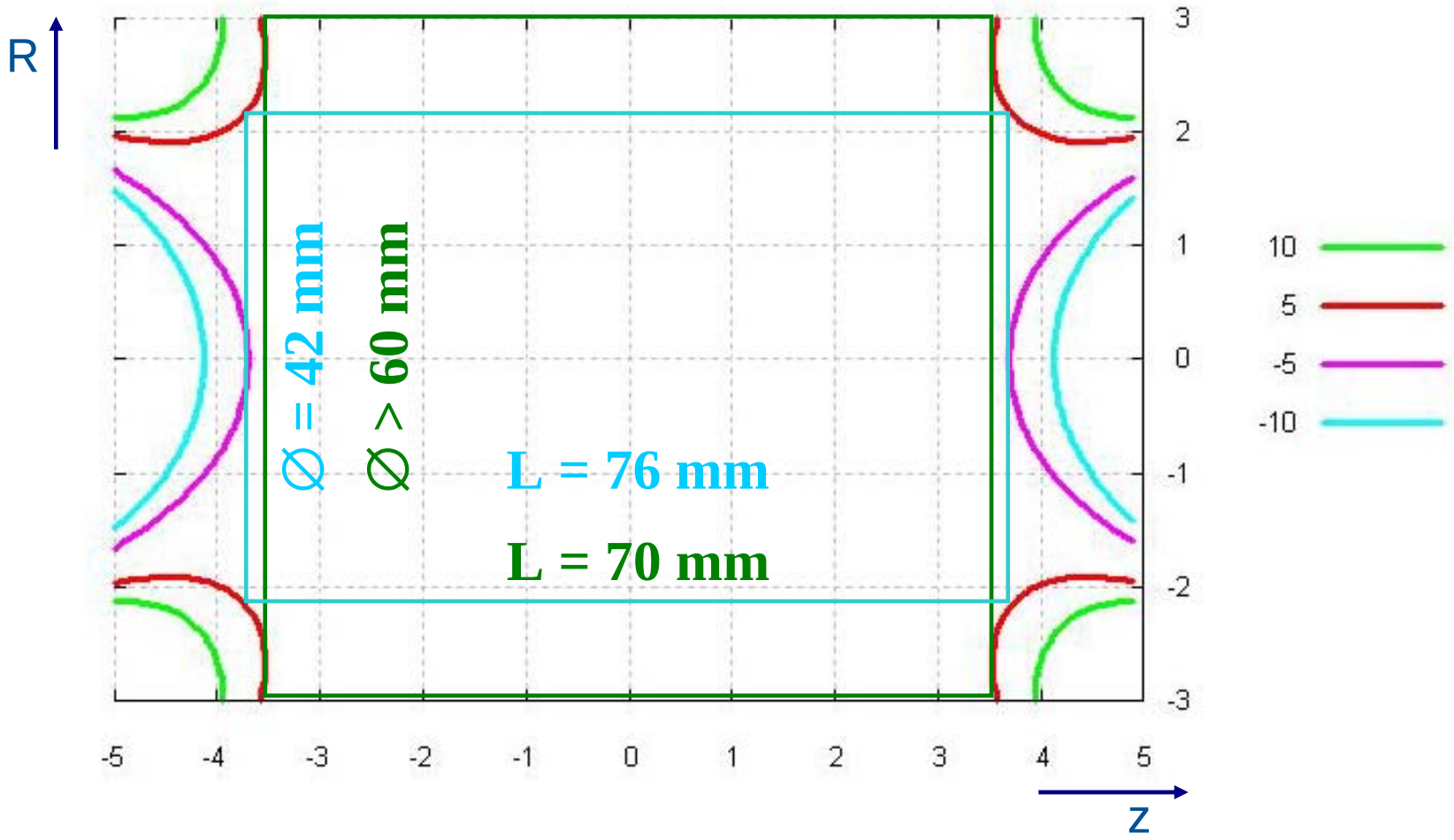

21 T with enlarged homogeneity

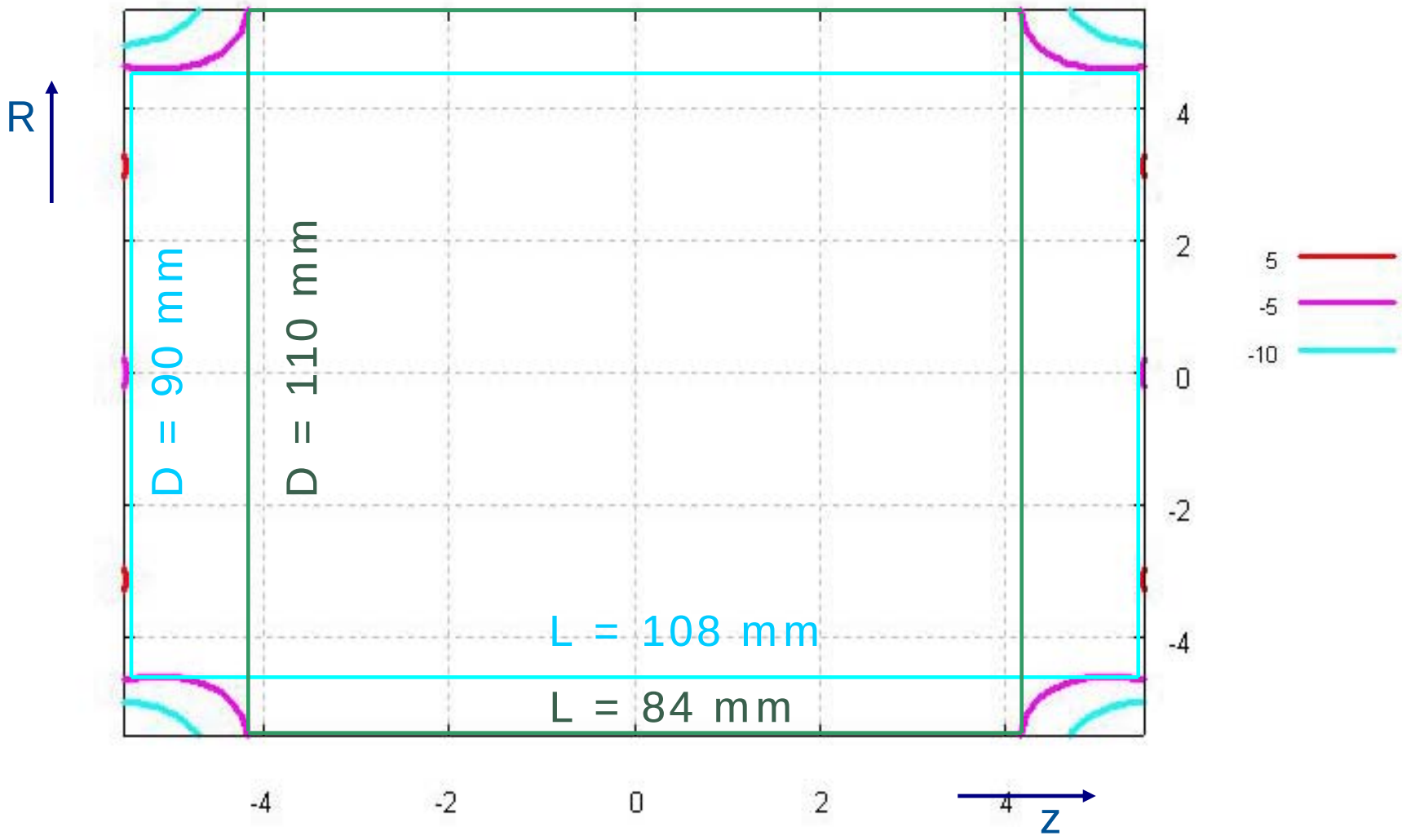

21 T with enlarged homogeneity

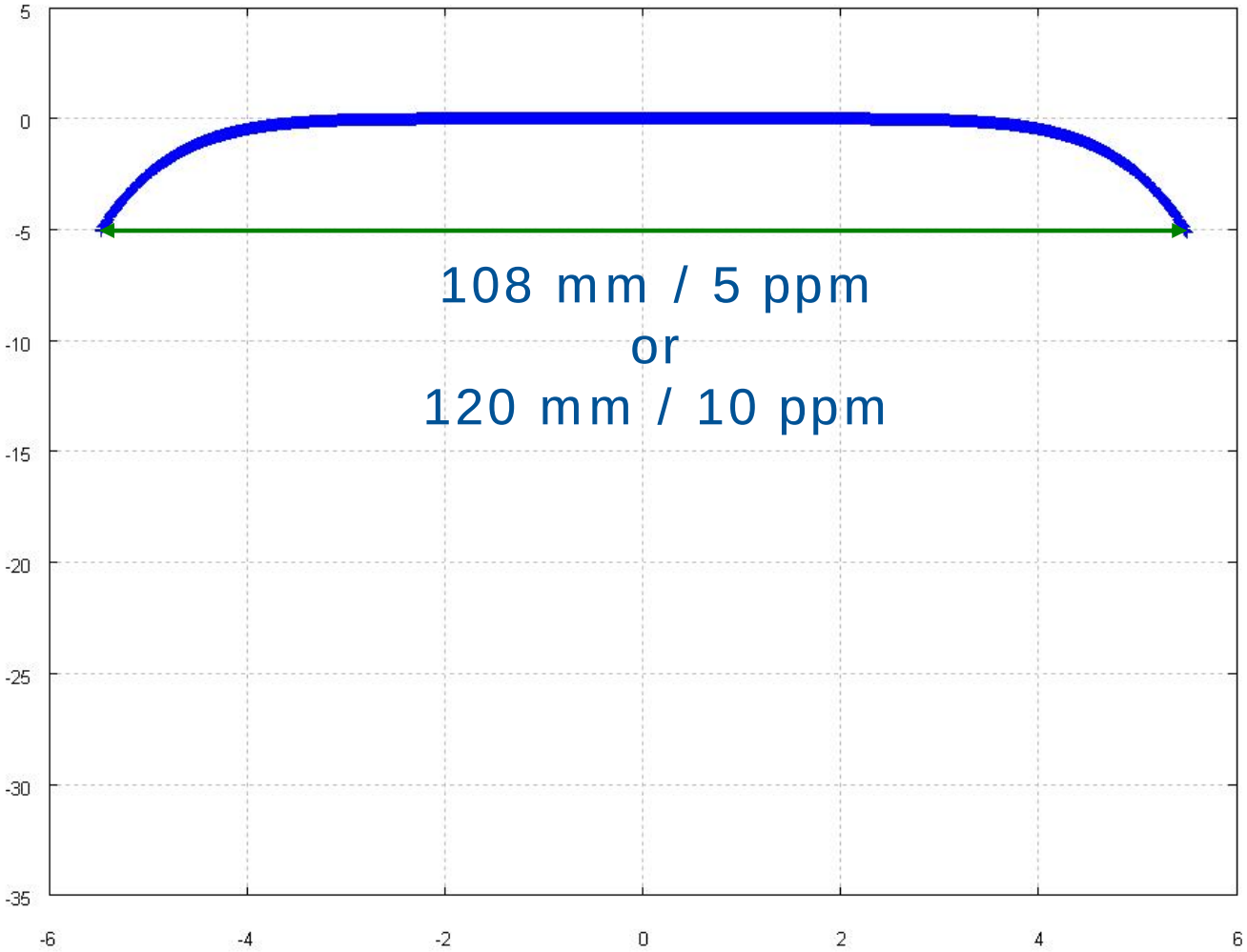

Future Materials for Ultra High Field Magnets

For even higher fields, superconductors need to have:

- High critical current I_c at high fields
- High mechanical strength

High Temperature Superconductors HTS

BSCCO Conductors: Bi 2223 and Bi 2212 (1G)

YBCO Coated Conductors (2G)

YBCO coated conductors production route

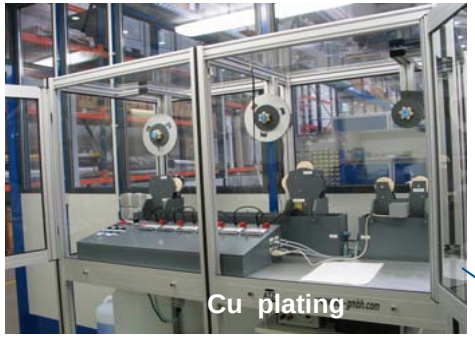

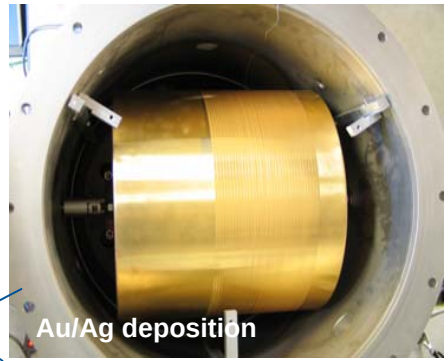

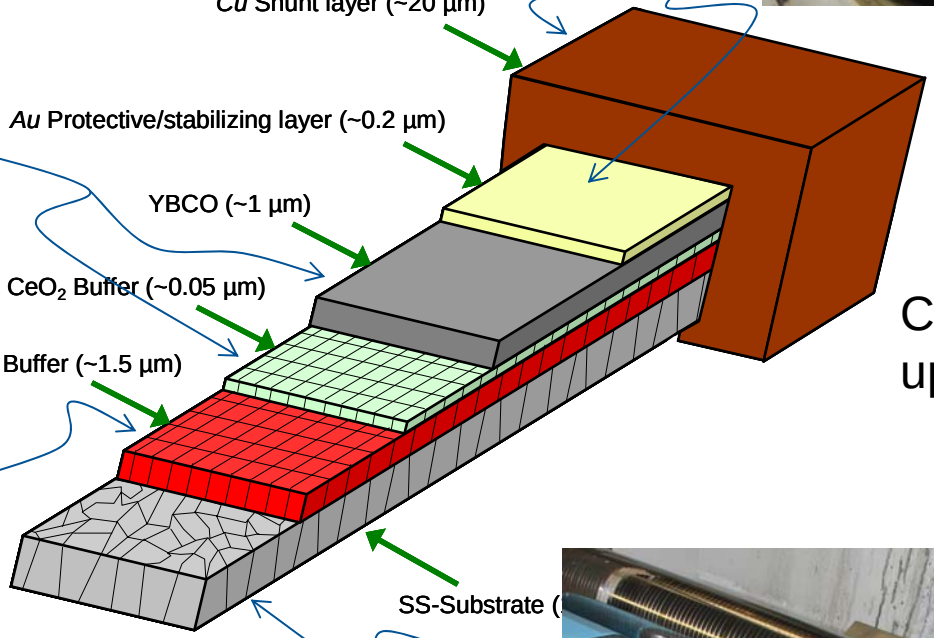

Currents:
up to 575A/cm-w

EHTS

ker BioSpin

HTS Challenges

- Long lengths (min. 2000-4000m)
- Continuous re-produceable conductor quality
- Two dimensional properties
- New solenoid winding technology
- Superconducting joint technology
- Quench protection
- Long term stability

All issues must be solved to design a long term reliable magnet!

100m tape coated with YBCO

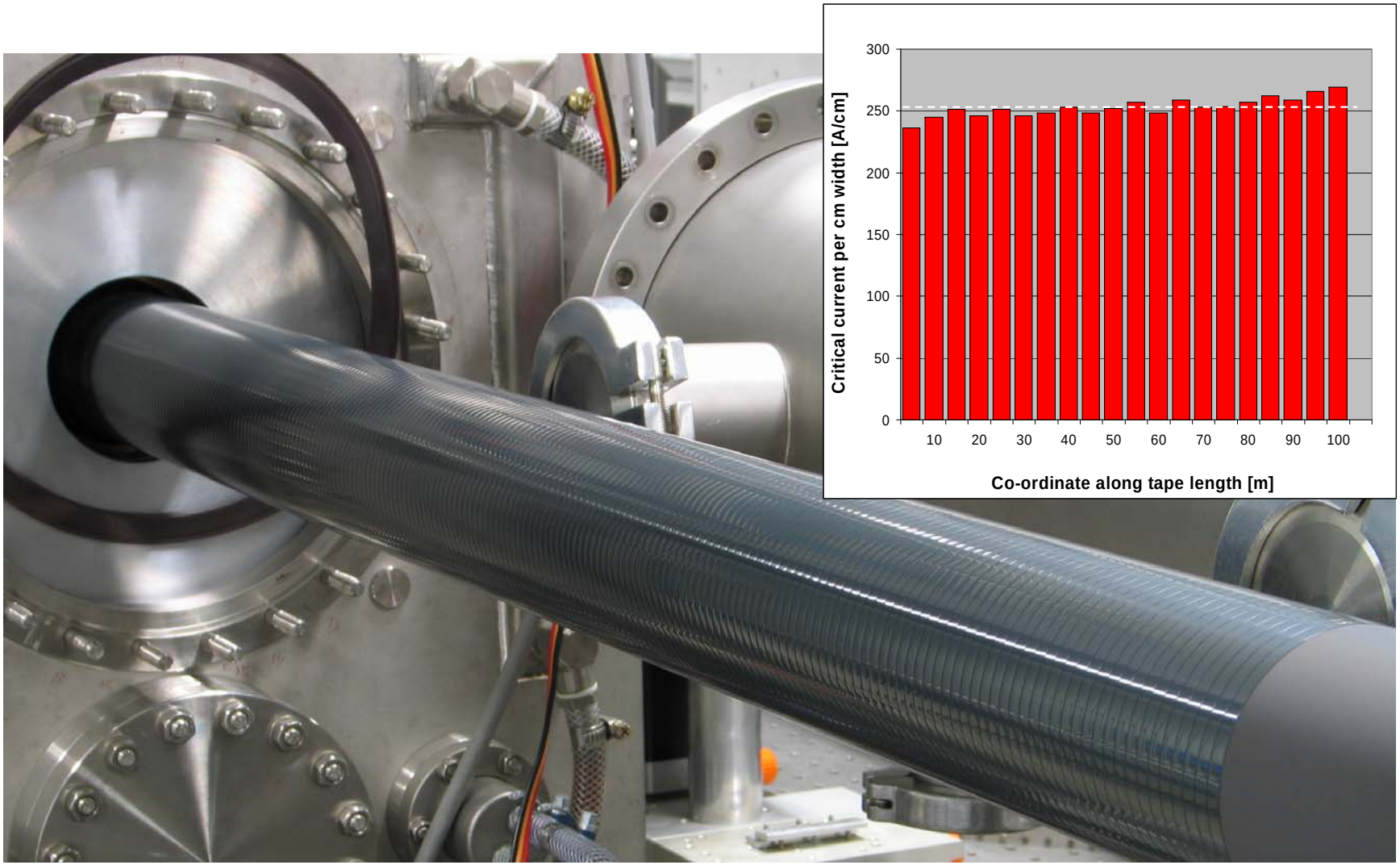

Bruker BioSpin

Angular Ic dependence

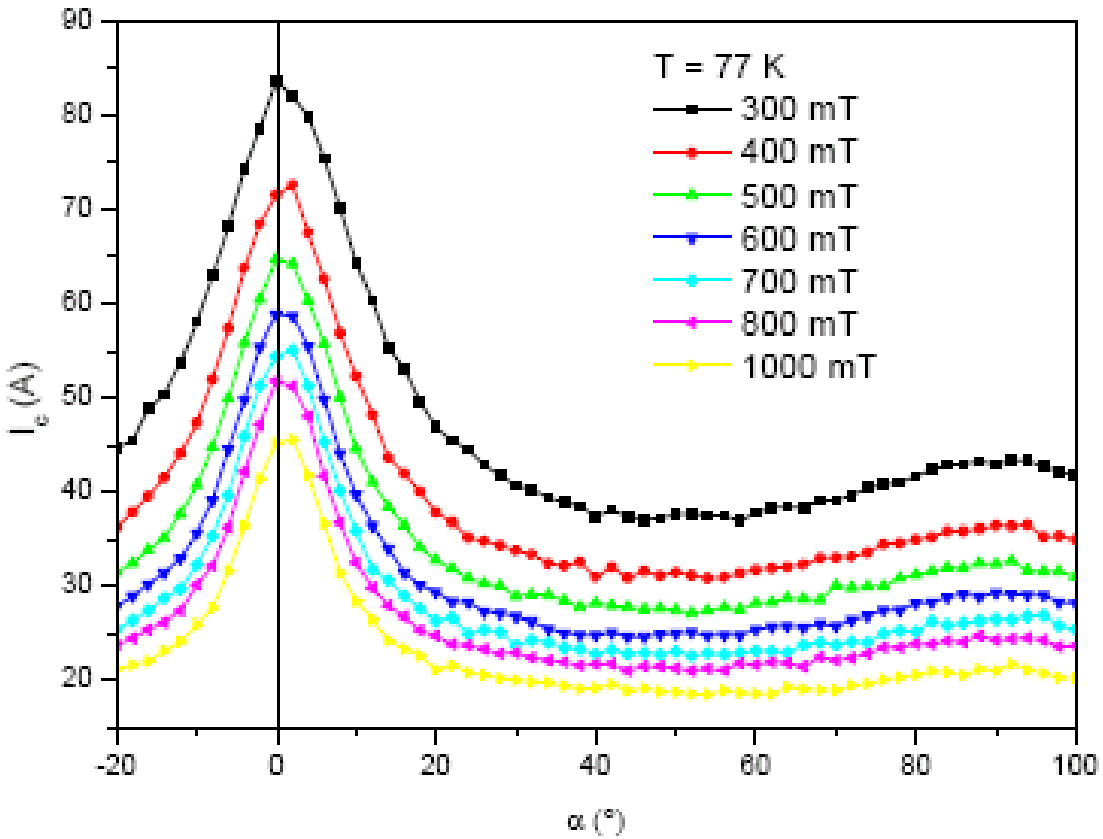

measured at TU Vienna (H. Weber, Sept 2007)

Summary

- Bruker has developed advanced high field magnet technology
- Technology has led to highest field shielded NMR, FTMS and in vivo MRI magnets
- Technology has excellent track record with over 250 systems installed
- A 21 T FTMS magnet is challenging but within the scope of Bruker's technology
- Higher field magnets can be built, once HTC conductors become reliably available in sufficient quality and length

www.bruker-biospin.com